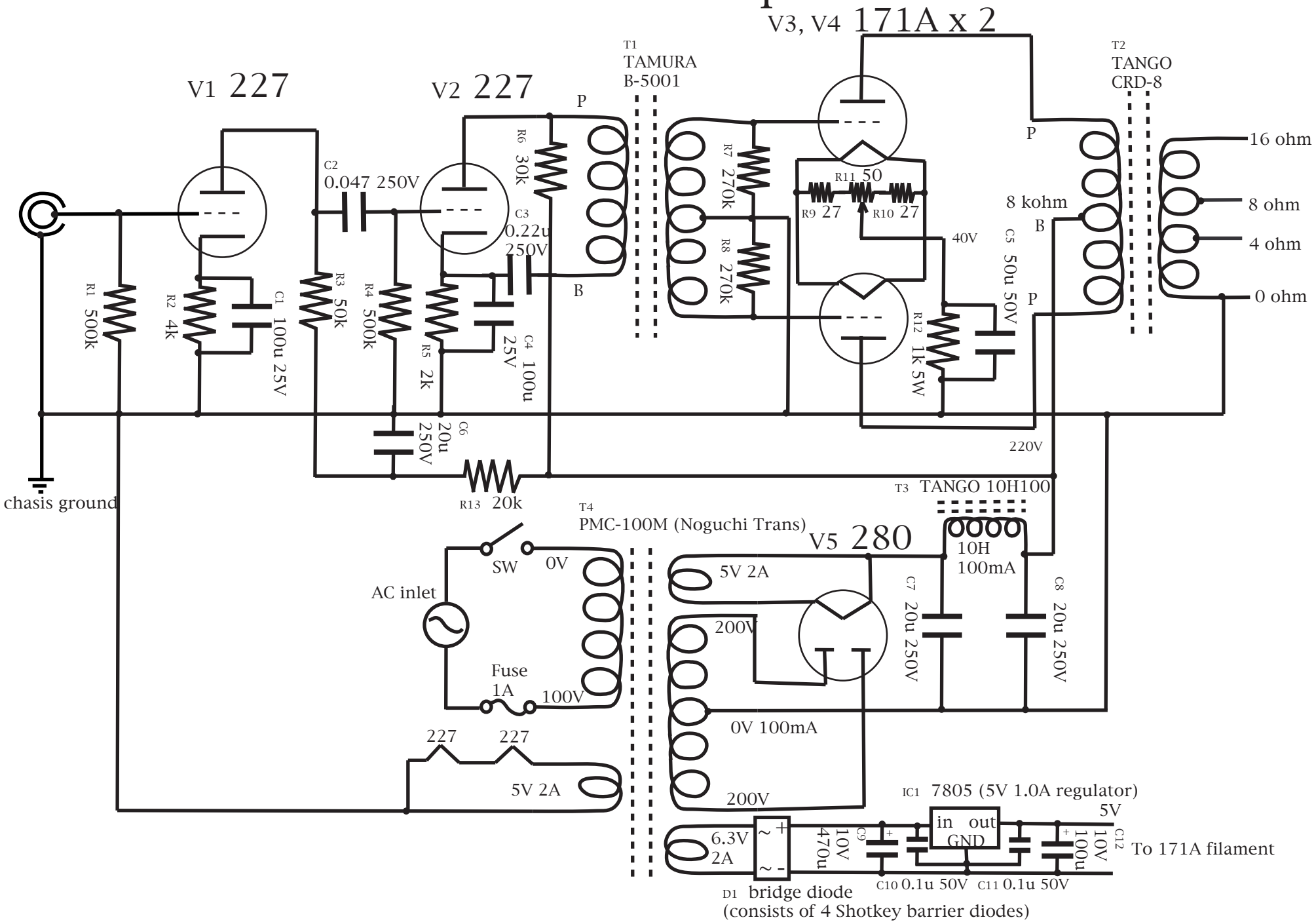171A Push Pull Amplifier